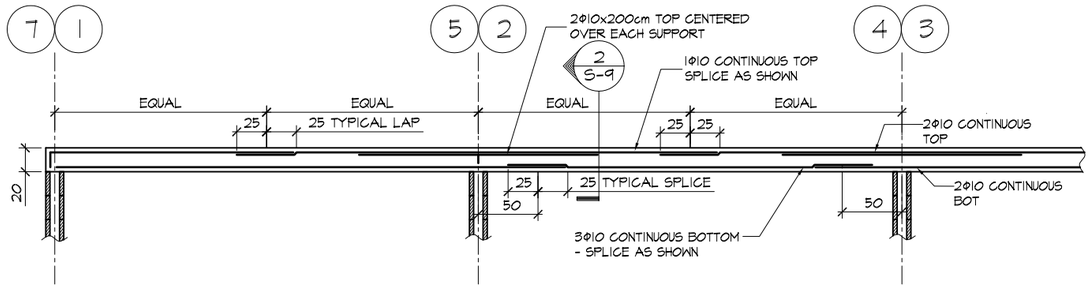


## 1 TYPICAL JOIST REINFORCING
1:50

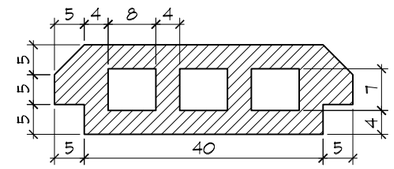


## 4 FILLER BLOCK DETAIL
BLOCK 17cm THICK 1:10

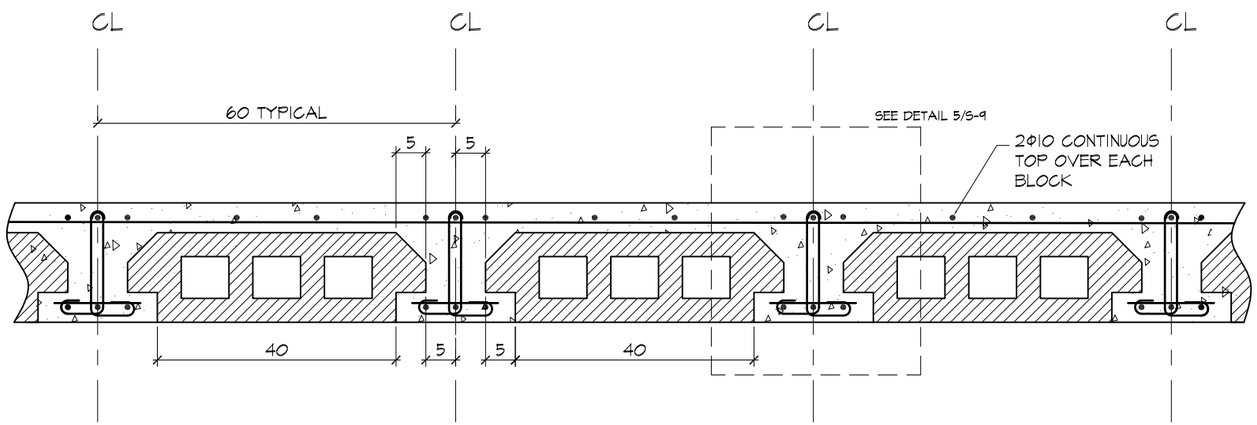


## 2 JOIST SECTION
1:10

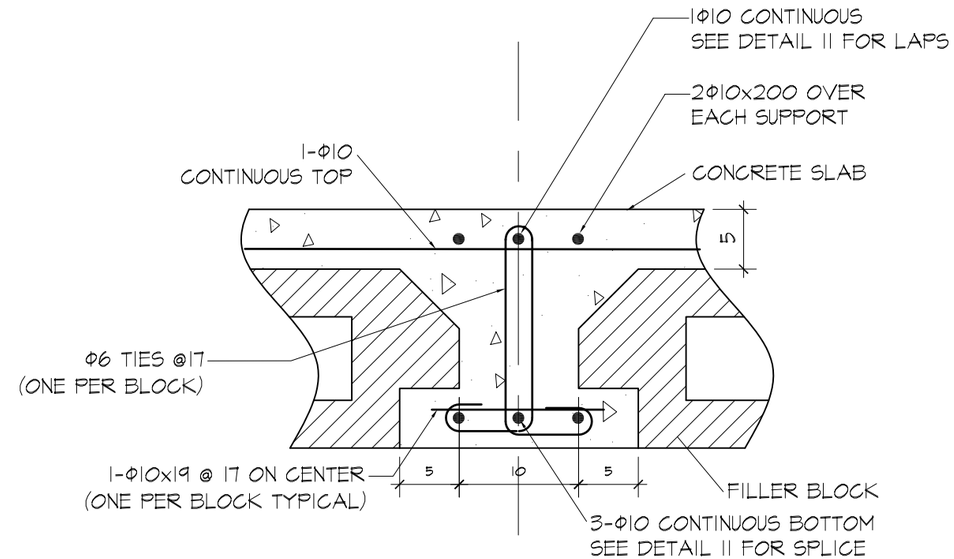


## 5 JOIST DETAIL
1:5

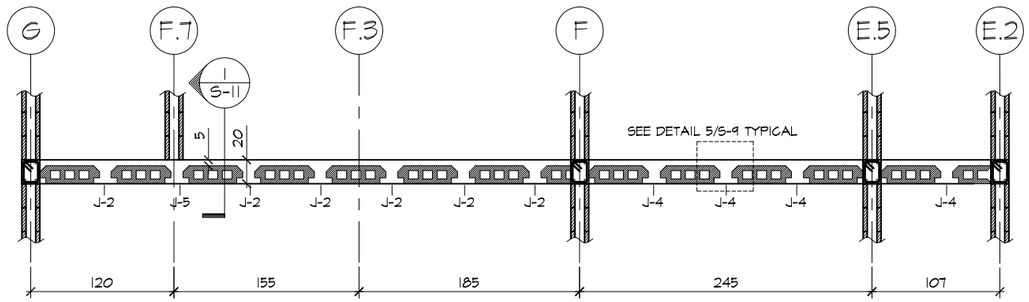


## 3 BETWEEN GRID 1.7 & 2
1:50

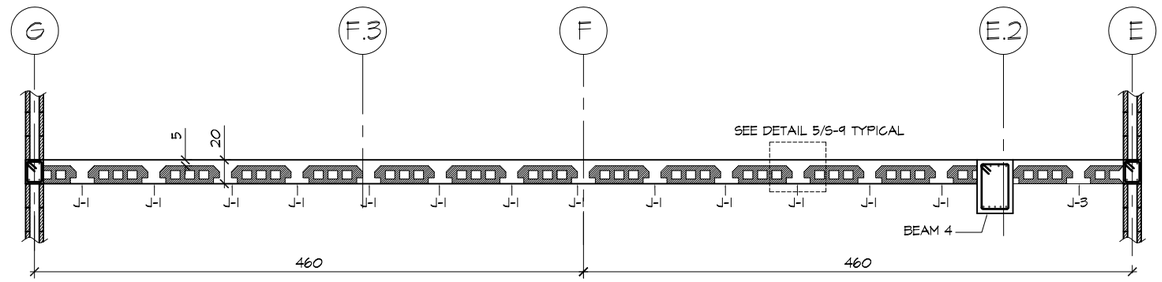


## 6 BETWEEN GRID 2 & 2.3
1:50

NOTE:
ALL DIMENSIONS ARE IN CENTIMETERS UNLESS OTHERWISE SPECIFIED. ALL REINFORCING BAR DIAMETERS ARE IN MILLIMETERS.


...designing a world of hope
ENGINEERING MINISTRIES INTERNATIONAL
130 EAST KIOWA ST. STE 200 COLORADO SPRINGS, CO 80903
PHONE: (719) 633-2078 FAX: (719) 633-2910 WWW.EMI.USA.ORG


THE LORD'S HOUSE - PASSY, SENEGAL

UPPER FLOOR DETAILS

DATE ISSUED: DEC 2007

PROJECT: 5424

SCALE: REFER TO VIEW cm

SHEET NUMBER S-9