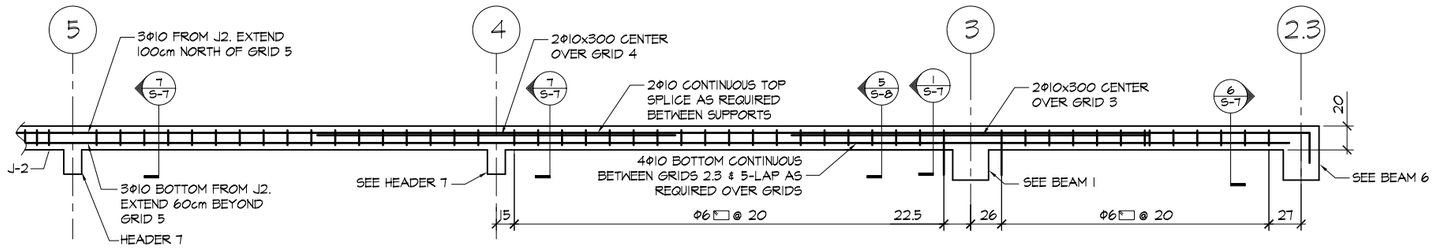

1 BEAM 8 ALONG GRID D

BEAM WIDTH 65cm 1:50

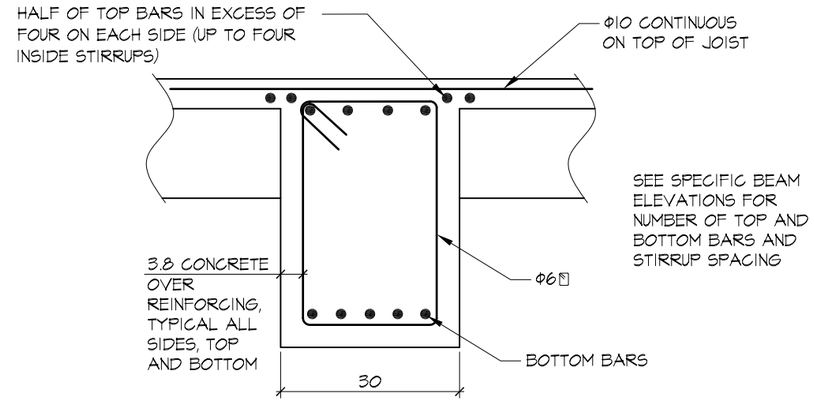

2 TYPICAL CONCRETE BEAM

1:10

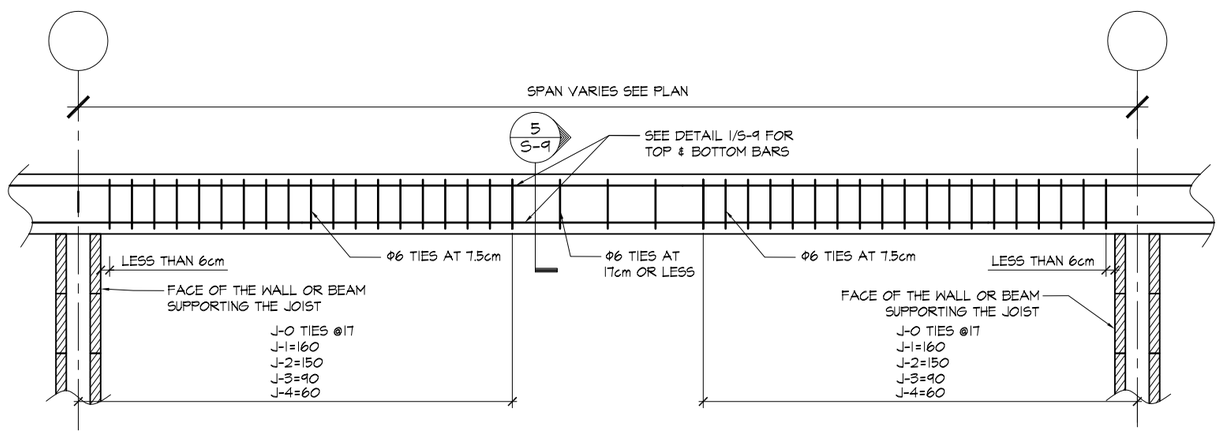

3 JOIST J-0; J-1; J-2; J-3 & J-4

1:20

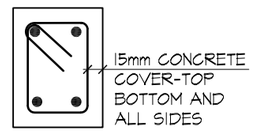

6 20x15 MEMBER

1:10

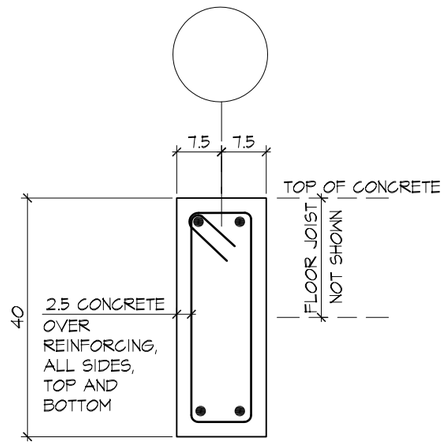

4 15cm WIDE HEADER

1:10

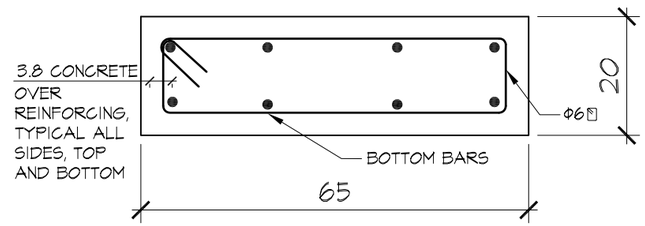

5 BEAM 8 ALONG GRID D

1:10

NOTE:
ALL DIMENSIONS ARE IN CENTIMETERS UNLESS OTHERWISE SPECIFIED. ALL REINFORCING BAR DIAMETERS ARE IN MILLIMETERS.

...designing a world of hope
ENGINEERING MINISTRIES INTERNATIONAL
130 EAST KIOWA ST. STE 200 COLORADO SPRINGS, CO 80903
PHONE: (719) 633-2078 FAX: (719) 633-2910 WWW.EMI.USA.ORG

THE LORD'S HOUSE - PASSY, SENEGAL

UPPER FLOOR
BEAMS & JOISTS

DATE ISSUED: DEC 2007

PROJECT: 5424

SCALE: 1:50 cm

SHEET NUMBER S-8