NOTE:
ALL DIMENSIONS ARE IN CENTIMETERS UNLESS OTHERWISE SPECIFIED. ALL REINFORCING BAR DIAMETERS ARE IN MILLIMETERS.

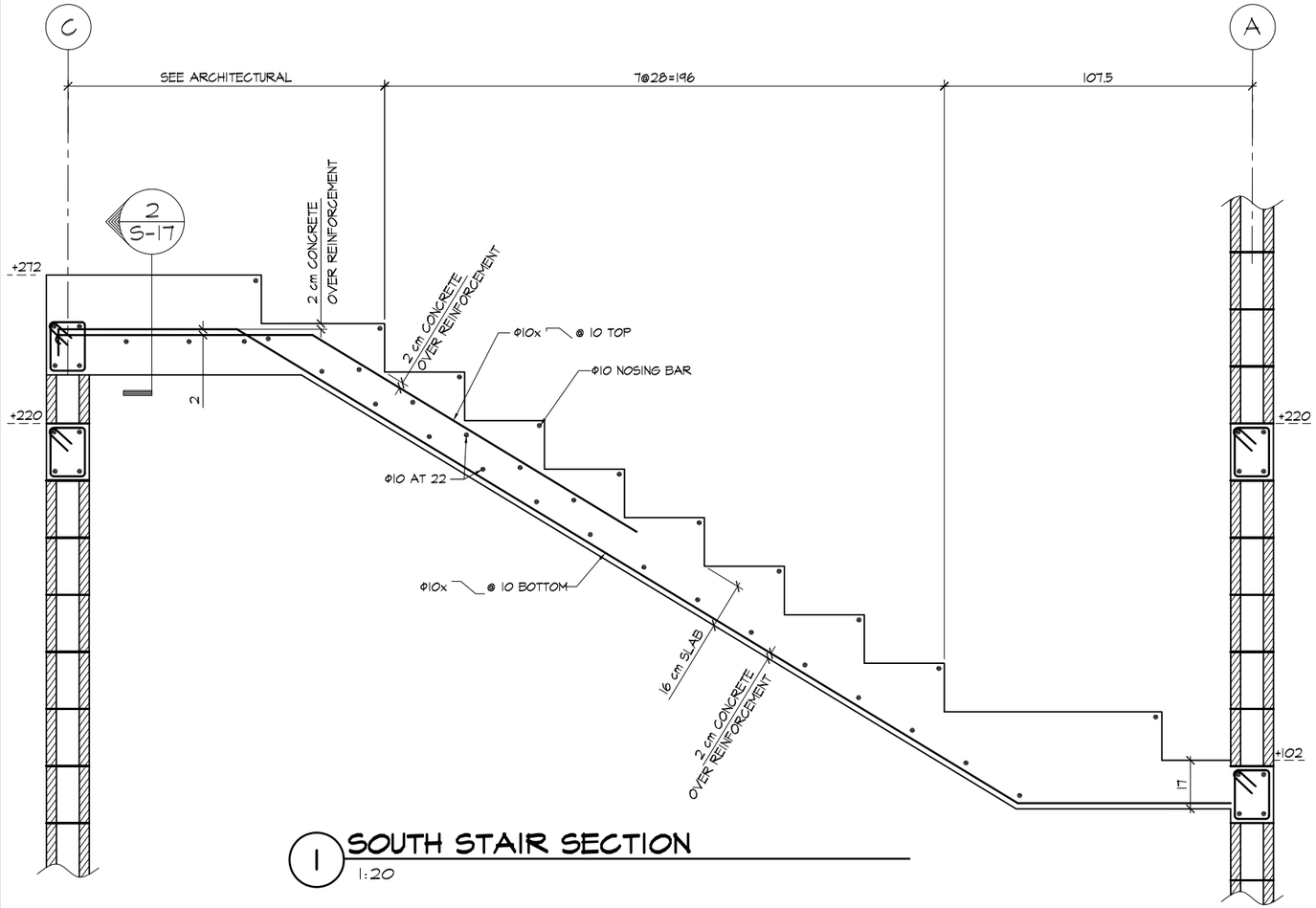

1 SOUTH STAIR SECTION
1:20

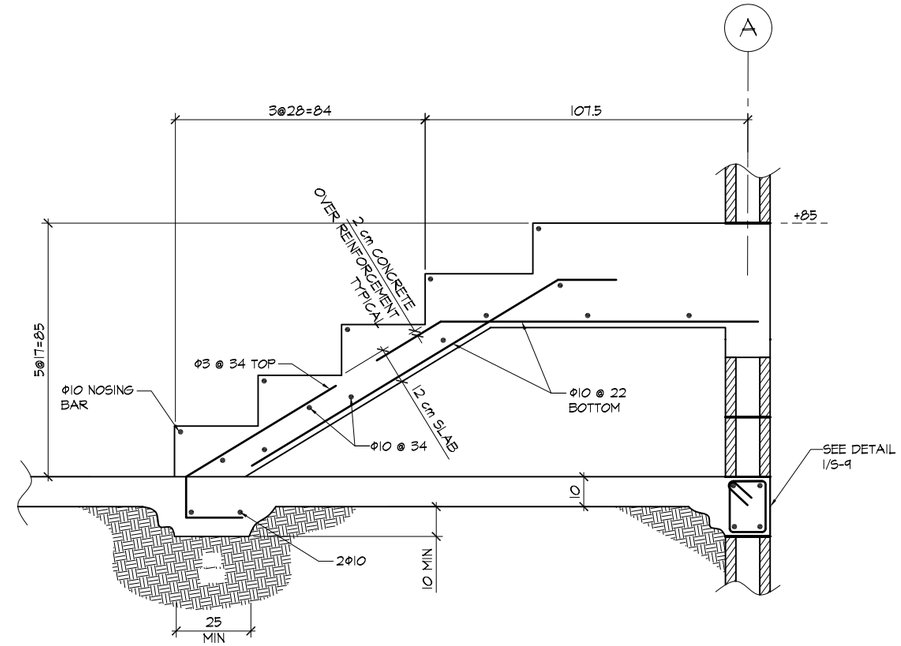

3 SOUTH STAIR SECTION
1:20

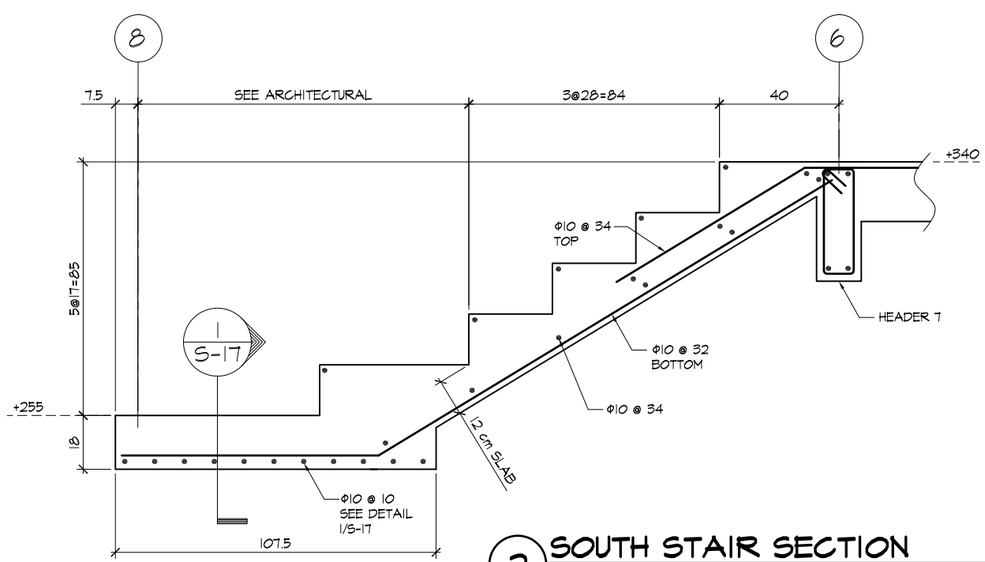

2 SOUTH STAIR SECTION
1:20

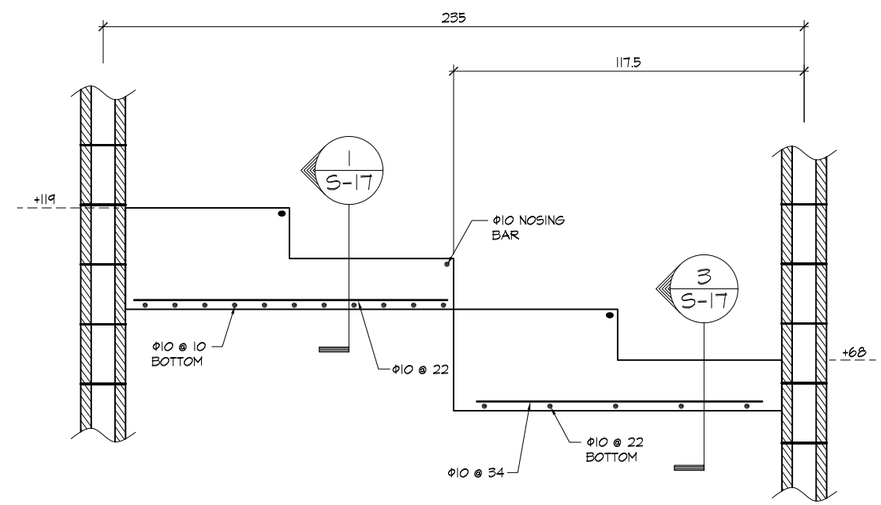

4 SOUTH STAIR SECTION
1:20

...designing a world of hope
ENGINEERING MINISTRIES INTERNATIONAL
130 EAST KIOWA ST. STE 200 COLORADO SPRINGS, CO 80903
PHONE: (719) 633-2078 FAX: (719) 633-2470 WWW.EMIUSA.ORG

THE LORD'S HOUSE - PASSY, SENEGAL

SOUTH STAIR

DATE ISSUED: DEC 2007

PROJECT: 5424

SCALE: 1:20 cm

SHEET NUMBER S-17